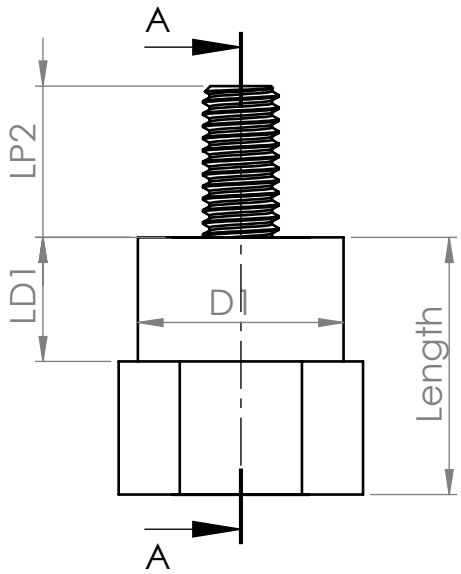

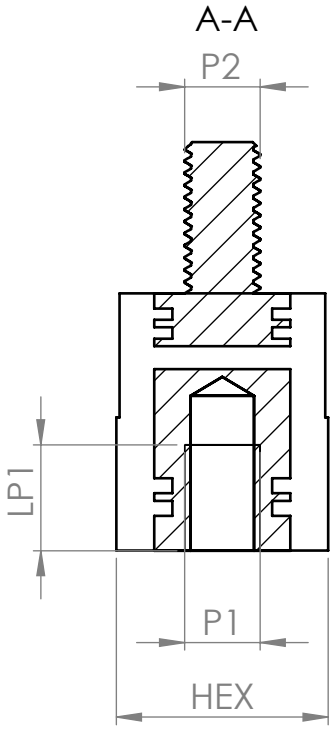

Article	Length (mm)	HEX (mm)	LD1 (mm)	D1 (mm)	P1	LP1 (mm)	P2	LP2 (mm)	Torque P1/P2 (Nm)
HC14.17-HF5.07CM5.10	17	14	8,2	13,6	M5	7	M5	10	7/4
HC14.17-HF5.07CM5.10	17	14	8,2	13,6	M5	7	M5	10	7/4
HC21.26-HF6.08CM6.20	26	21	16	20	M6	8	M6	20	11/11
HC21.26-HF6.10CM6.10	26	21	16	20	M6	10	M6	10	11/11
HC21.26-HF8.08CM8.08	26	21	16	20	M8	8	M8	8	30/16
HC21.26-HF8.08CM8.10	26	21	16	20	M8	8	M8	10	30/16
HC21.26-HF8.08CM8.20	26	21	16	20	M8	8	M8	20	30/16
HC21.35-HF6.08CM6.20	35	21	25	20	M6	8	M6	20	11/11
HC21.35-HF8.08CM8.08	35	21	25	20	M8	8	M8	8	30/16
HC21.35-HF8.08CM8.20	35	21	25	20	M8	8	M8	20	30/16

Material	Polyester, 20% glass-fiber
Material inserts	Steel Zinc-plated
Dielectric strength	10kV/mm
max. Temperature	100°C
Color	white
Conformity	RoHs
	UL94-V0
	EN-45545

Schutzvermerk nach ISO 16016 beachten
Copyright acc. ISO 16016

Tolerierung ISO 8015
Tolerances acc. ISO 8015

Oberfl. / Finish:

Maßstab / Scale: 2:1

Gewicht / Weight: 9.93 g

	Datum Date	Name
Bearb. Drawn	08-05-24	NK
Freig. Released		

Werkstoff / Material: Polyesterharz

Benennung / Title:

Isolator Stand-Off - Abstandsisolator

NICHT FREIGEGEBEN

Rev.	Änderung Modification	Datum Date	Name

QUICK-OHM Küpper & Co. GmbH

Zeichnungsnr. / DRW No: HC-HF-CM

Revision

Blatt Sheet 1 / 1

A4

Ursprung/Origin:

letzt Speicherung / Last saved: 11.06.2025